Technical Drawings

SIZES

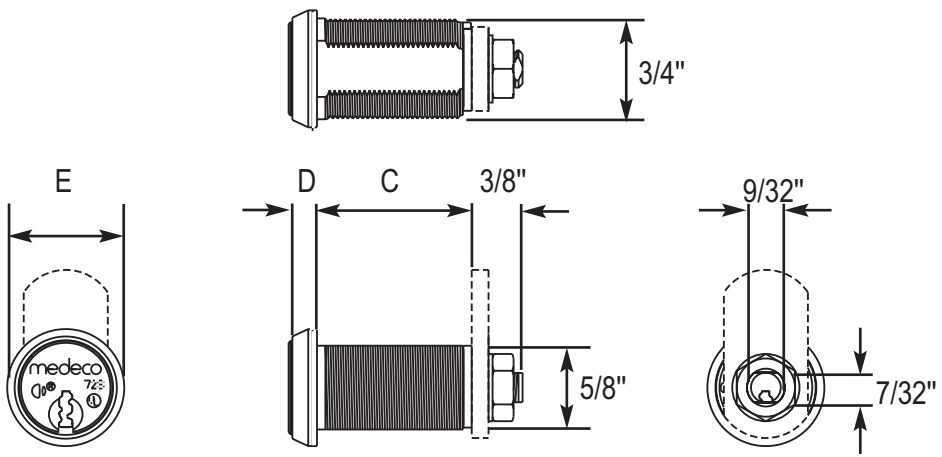

Table 1

Size Code	# of Pins	Dimension C (in.)	Dimension D (in.)	Dimension E (in.)
0250	5	11/16''	7/16''	1''
0350	5	7/8''	5/16''	7/8''
0450	5	1''	3/16''	7/8''
0550	4	7/8''	3/16''	7/8''
0650	5	1 1/8''	3/16''	7/8''
0750	4	11/16''	5/16''	7/8''
0850	4	5/8''	3/8''	7/8''
0950	5	3/4''	3/8''	7/8''
1150	5	5/8''	1/2''	1''
1250	3	7/16''	3/8''	1''
1251	3	5/8''	3/16''	7/8''
1450	5	1 1/2''	3/16''	7/8''
1452	5	2''	5/16''	7/8''

Standard sizes described. Consult Medeco® customer service for variations not described